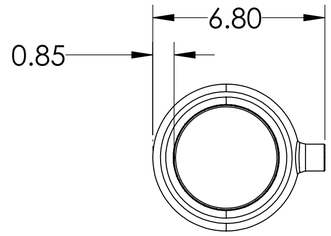

NOTE:
- THE MINIMUM RECOMMENDED CLEARANCE BETWEEN THE WALL AND THE DRAIN LINE IS 1 INCH
- ALL DIMENSIONS ARE IN INCHES

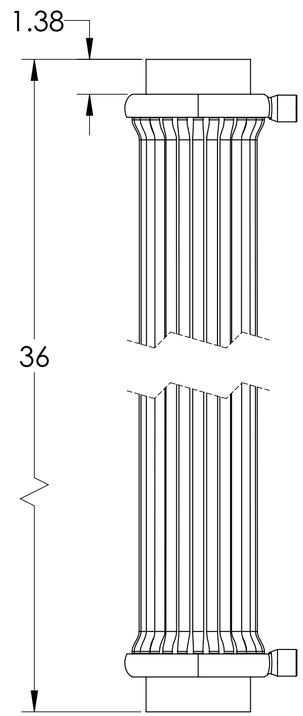

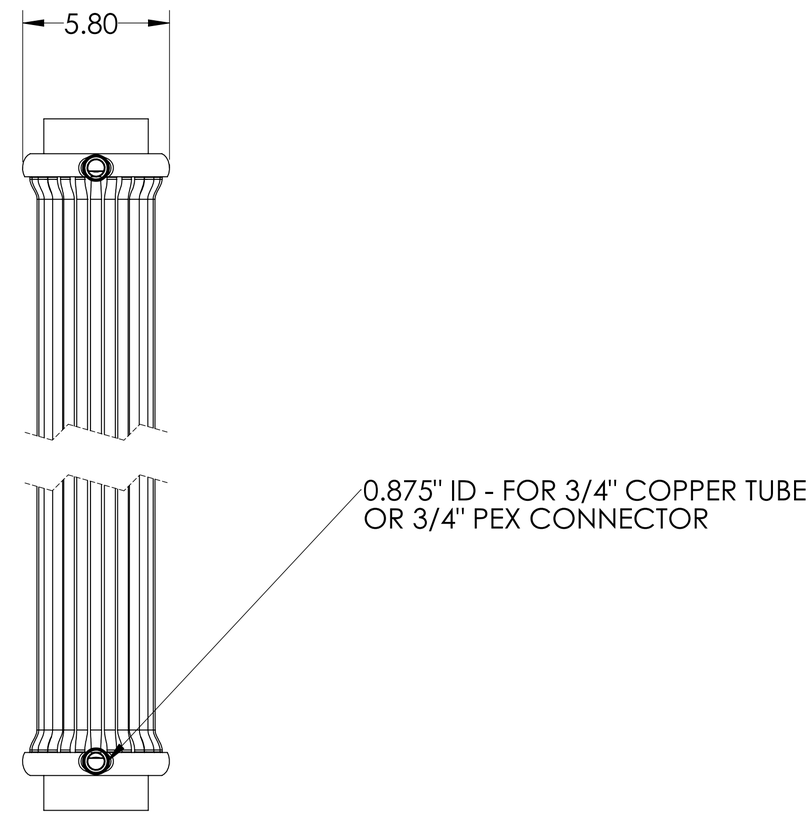

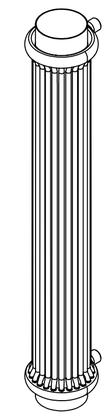

ECODRAIN INC.

4800 St-Ambroise, Suite #115
Montréal, Qc, Canada
H4C 3N8
514-448-4798 Montréal, Qc H4C 3N8 Canada

		Heat Recovery Efficency at 9.5 L/min	Nominal diameter		Length		Heat Energy Recovery Rate	Pressure loss		Mass	
		%	in	mm	in	mm	kW	psi	kPa	lbs	kg
V1000-4-36	REV-0	50.6%	4	102	36	914	9.4	1.0	7	20.89	9.5
November-23-16 12:24:51 PM	1/1										